TOP VIEW

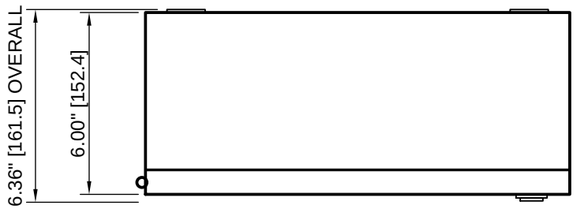

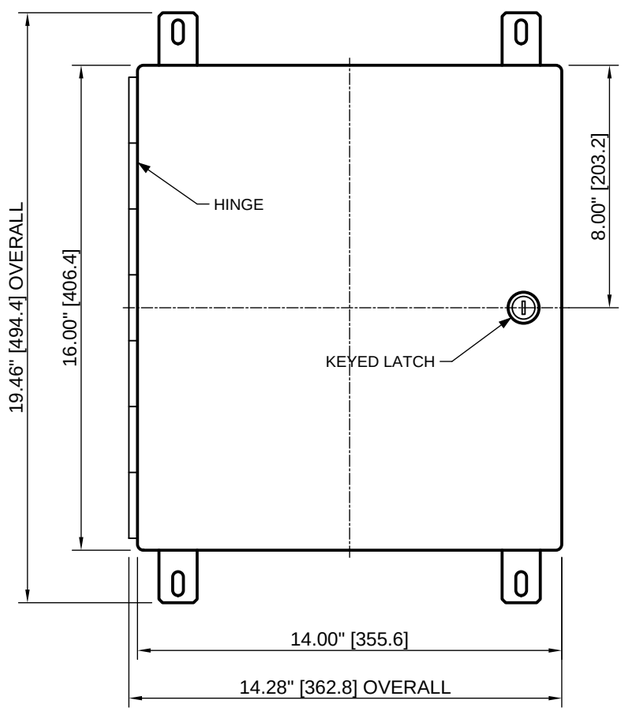

FRONT VIEW

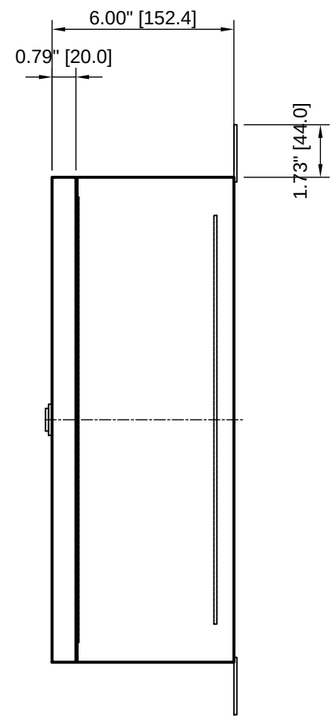

RIGHT SIDE VIEW

DOOR SHOWN OPEN 90°

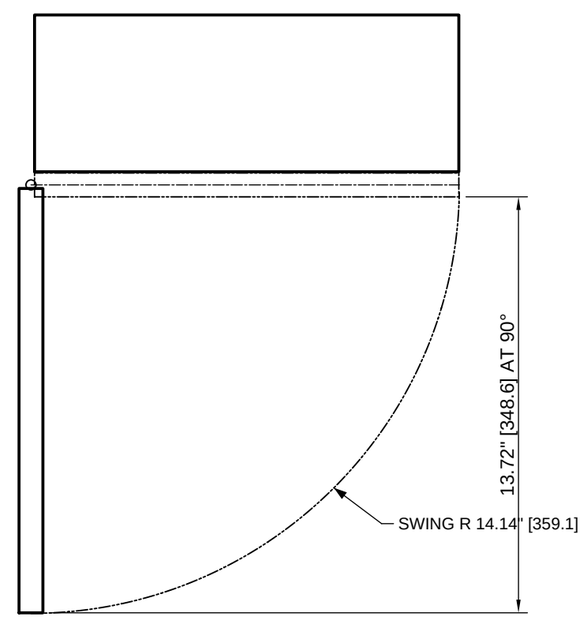

DOOR SWING (PLAN)

DIMENSIONS + CONSTRUCTION (NOMINAL)	
Outside H x W x D (body)	16 x 14 x 6 in [406.4 x 355.6 x 152.4 mm]
Overall incl. feet, hinge, latch	19.46 x 14.28 x 6.41 in
Inside H x W x D (nominal)	403.4 x 352.6 x 149.4 mm [15.88 x 13.88 x 5.88 in]
Door frame opening (nominal)	373.4 x 322.6 mm
Mounting panel	342.4 x 291.6 x 2.5 mm, galvanized steel
Usable depth (panel to door)	134.1 mm [5.28 in]
Wall-mount hole pattern	287.6 W x 462.4 H mm, 4 x slot 9 x 20 mm
Sheet thickness	1.5 mm (16 ga)
Door	Single door, continuous hinge (left), continuous gasket
Latching	Quarter-turn latch with key
Grounding	Ground studs on body and door

NOTES
1. Dimensions inch [mm]. Outside dimensions are the body (door closed); feet, hinge and latch add to them.
2. Inside dimensions are nominal, from the sheet thickness and the 20 mm door collar.
3. Origin of the 3D model: centre of the door face, +Y up, +Z out of the door.
4. Mounting details: sheet 2.

NEMA4 Enclosure

by Industrial Monitor Direct

nema4enclosure.com

16" x 14" x 6" WALL-MOUNT ENCLOSURE, HINGED DOOR - 316L STAINLESS STEEL

MATERIAL: 316L stainless steel, #4 brushed finish
RATING: manufacturer-rated NEMA 4X-type / IP66 - not UL listed
Reference drawing - nominal dimensions, final dimensions confirmed with your order.

SKU IMD-ENC-SS6-161406	DRAWING IMD-ENC-SS6-161406-GA
SHEET 1 OF 2	SCALE 1:5
UNITS INCH [MM]	REV A
PROJECTION THIRD ANGLE	ISSUED 2026-10-23

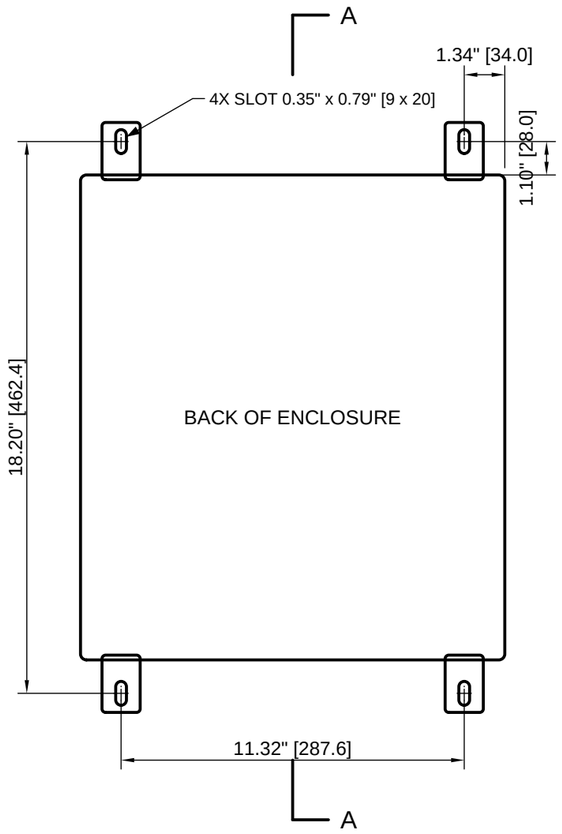

REAR VIEW
WALL-MOUNT HOLE PATTERN

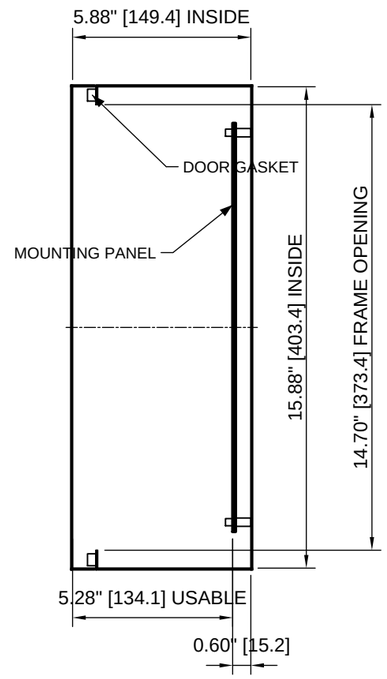

SECTION A-A
INSIDE DIMENSIONS, DOOR LEFT

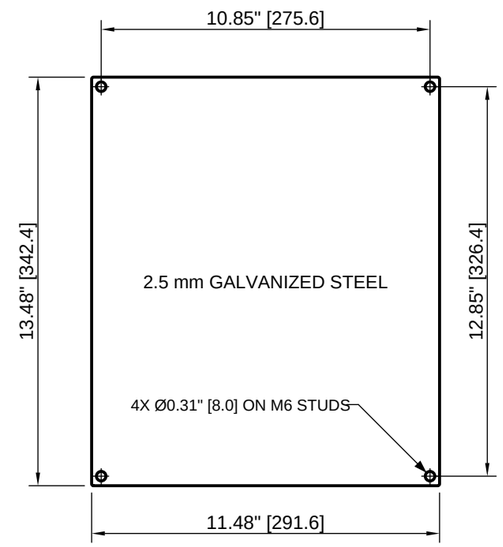

MOUNTING PANEL
REMOVABLE

MOUNTING (NOMINAL)	
Wall-mount feet	4, external, 0.10 in [2.5 mm] stainless, slot 9 x 20 mm
Hole pattern (slot centres)	11.32 x 18.20 in [287.6 x 462.4 mm]
Recommended fasteners	4 x M8 / 5/16 in, stainless, to suit the wall
Mounting panel	13.48 x 11.48 in [342.4 x 291.6 mm] x 2.5 mm
Panel hole pattern	12.85 x 10.85 in [326.4 x 275.6 mm], 4 x Ø8 mm
Panel offset	Front face 15.25 mm from the inside back
Usable depth	134.1 mm, mounting panel to door
Inside (nominal)	403.4 x 352.6 x 149.4 mm

NOTES
1. Dimensions inch [mm].
2. Section A-A is cut through the centre; sheet metal shown solid.
3. Mount on a flat surface able to carry the enclosure and its contents.

NEMA4 Enclosure

by Industrial Monitor Direct

nema4enclosure.com

16" x 14" x 6" WALL-MOUNT ENCLOSURE, HINGED DOOR - 316L STAINLESS STEEL

MATERIAL: 316L stainless steel, #4 brushed finish
RATING: manufacturer-rated NEMA 4X-type / IP66 - not UL listed
Reference drawing - nominal dimensions, final dimensions confirmed with your order.

SKU IMD-ENC-SS6-161406	DRAWING IMD-ENC-SS6-161406-MT
SHEET 2 OF 2	SCALE 1:5
UNITS INCH [MM]	REV A
PROJECTION THIRD ANGLE	ISSUED 2026-10-23